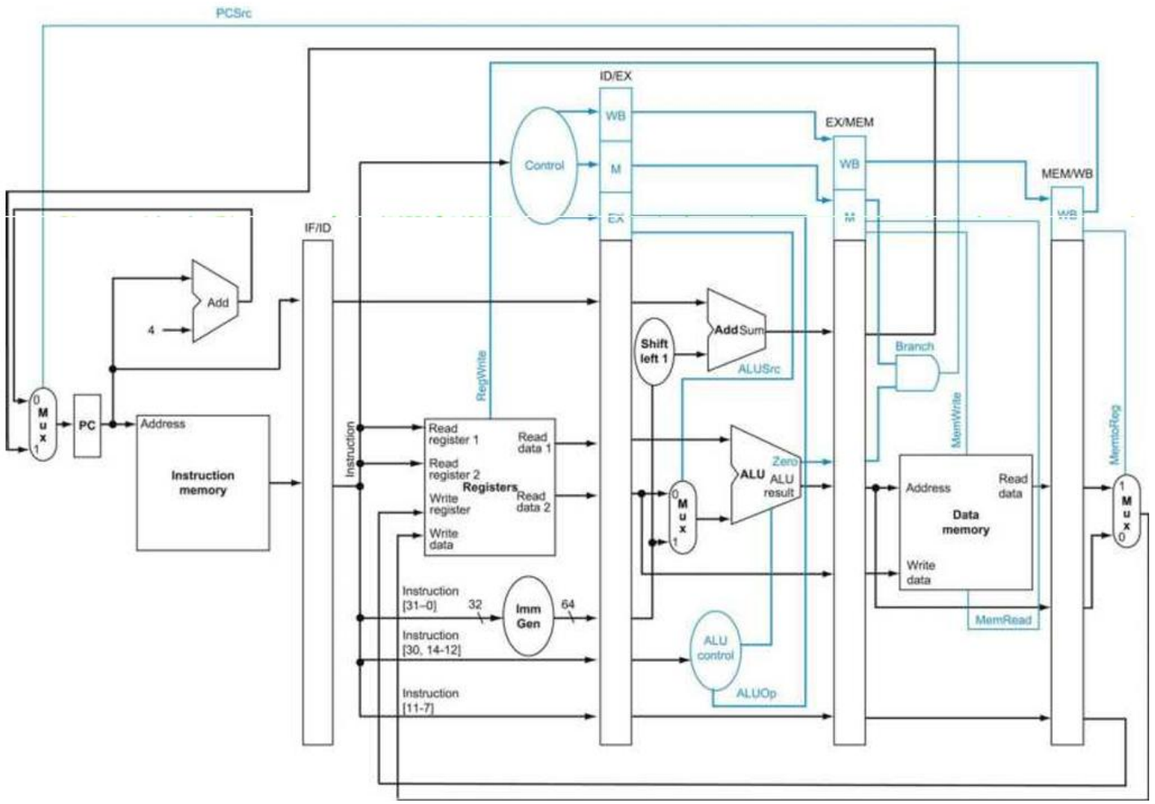

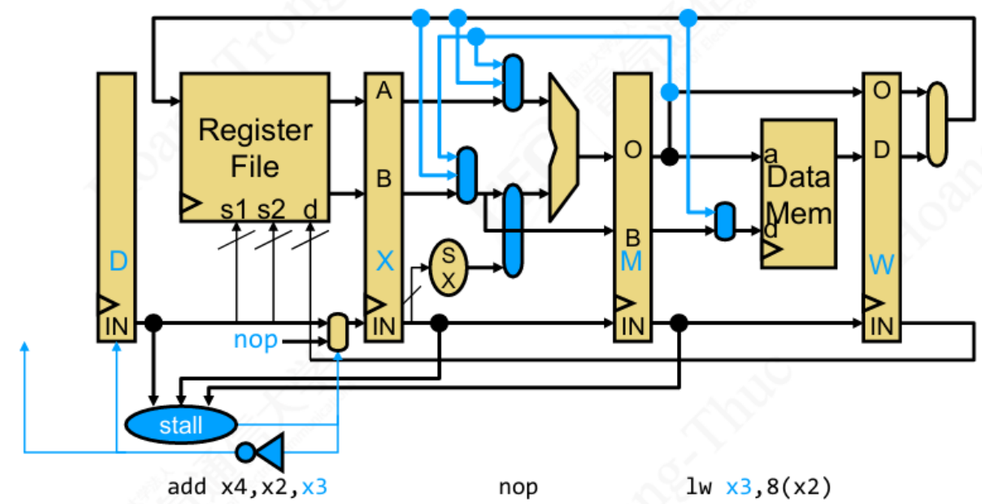


```
div x1,x2,x3 F D X0 X1 X2 X3 X4 X5 X6 X7 M W
addi x4,x1,0   F D  *  *  *  *  *  *  *  X M W
```

Your divide pipeline should also permit back-to-back execution of consecutive ***independent*** divide inst.

```
div x1,x2,x3 F D X0 X1 X2 X3 X4 X5 X6 X7 M  W
div x4,x5,x6   F D  X0 X1 X2 X3 X4 X5 X6 X7 M W
```

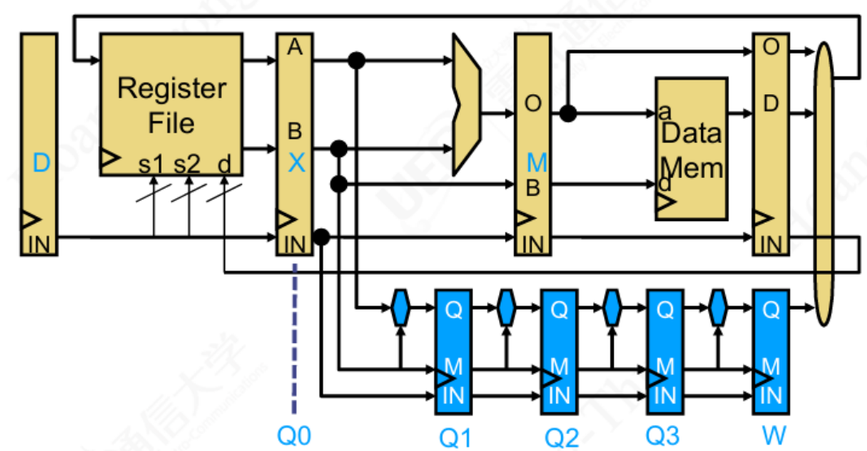

	1	2	3	4	5	6	7	8	9
div x4,x3,x5	F	D	Q0	Q1	Q2	Q3	W		
addi x6,x4,1		F	D	**d***	**d***	**d***	X	M	W